EPE

Filters . Accumulators

High Pressure Duplex Filters

250/450 LD 0003-0145
250/450 LDN 0040-1000

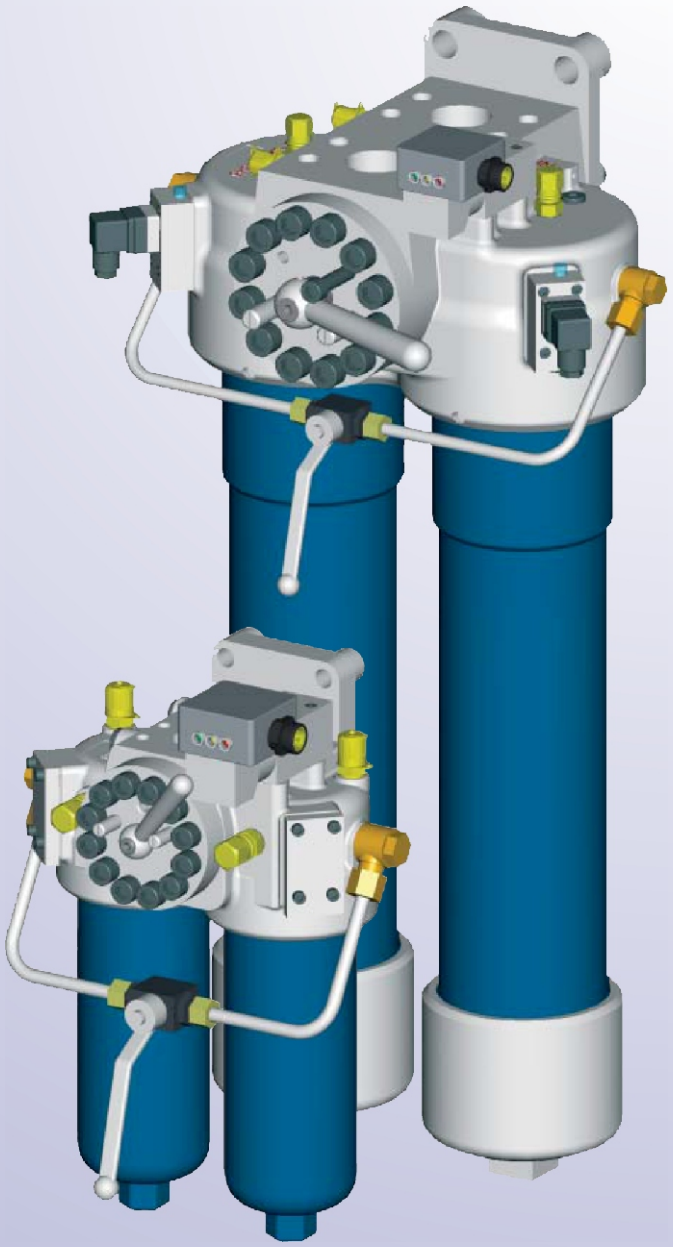

Filters for inline installation for continuous operation

LDN-Type with Filter Elements according to DIN 24550

Optimised flow characteristics

Low pressure drop

Special high efficient filter media

Operating pressure: 250/450 bar
Connections up to SAE 2”

ISO 9001 BUREAU VERITAS Certification

UKAS QUALITY MANAGEMENT 008

High Pressure Duplex Filters

250/450 LD 0003-0145
250/450 LDN 0040-1000
Operating pressure 250/450 bar
Operating temperature -10°C up to +100°C
Connections up to SAE 2”

Application

Filtration of liquids and lubricants.
Filtration of liquids and gases.
Installation in pipelines to protect subsequent system components from contamination.
Continuous operation due to duplex filter design.

Design

Filter head with inlet, outlet and filter element spigots. Filter bowl is unscrewed downwards.
Filter head includes further switching valve for closure ref. starting filter side.

Material: as per spare part list in this brochure.

Filter Element

Pleated design with optimised pleat density and various filter media. The filter element is the most important component of the filter in view of prolonged life and wear protection of the system.
Oil cleanliness, the initial pressure drop and the dirt holding capacity are the most important criteria for selection.
For further detailed information please refer our ”Filter Elements” brochure.

Accessories

Maintenance Indicator

For monitoring the filter element’s contamination status;
visual and visual/electrical indicators, with one or two switching points are available.

Vent Valve

For removing the air from the filter during start up and for secure de pressurising.

Performace Characteristics

Oil viscosity : 30mm²/s
Specific gravity<0,9 kg/dm²

Pressure drop curves for filter assembly
Recommended initial Δp for filter selection = 2,0 bar (250 LD/LDN) / 2,5 bar (450 LD/LDN)
Recommended max velocity = 6 m/sec (250 LD/LDN)/7 m/sec (450 LD/LDN)

...LD 0005

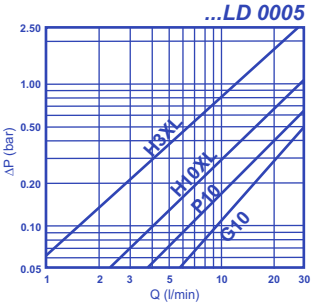

...LD 0005 / LDN 0040

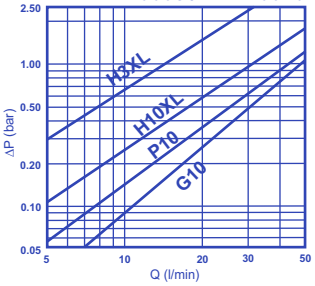

...LD 0008 / LDN 0063

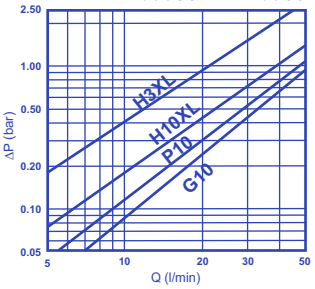

...LD 0013 / LDN 0100

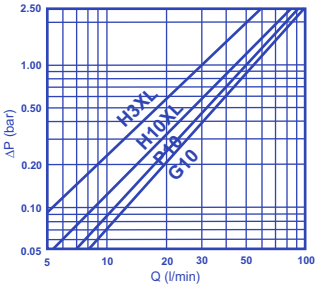

...LD 0015

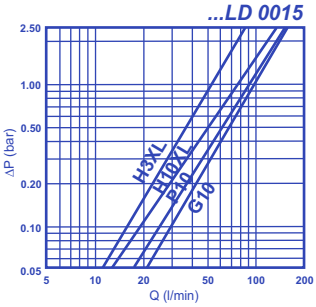

...LD 0018

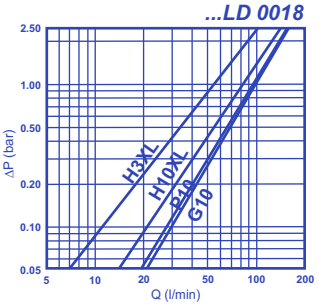

...LD 0020 / LDN 0160

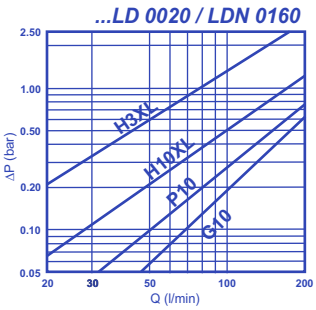

...LD 0030 / LDN 0250

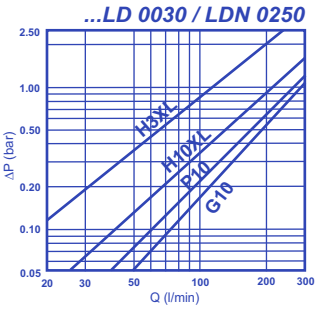

...LD 0045 / LDN 0400

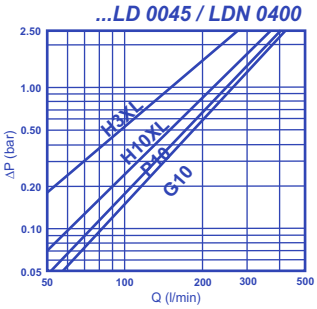

...LD 0095 / LDN 0630

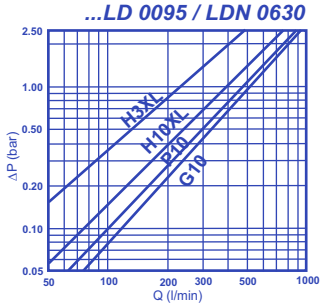

...LD 0145 / LDN 1000

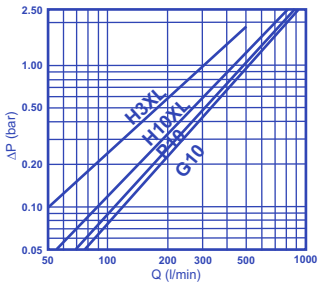

Ordering Information

Special designs available on request.

Filter Type	Magnet	Maintenance Indicator	Connection	Material
LD = Duplex filter with EPE standard filter element **LDN**= Duplex filter with filter element acc.to DIN 24550	**0** = without	**0** = without **A..** = visual indicator **B..** = combined visual/electrical Indicator with electric plug **D..** = combined visual/electrical indicator with signal lights and two switching points Standard switch pressure 2,5 bar See illustrations of maintenance indicator for detailed information and technical data.	**R0** = Pipe thread for 250/450 LD 0003-0013 and 250/450 LDN 0040-0100 **SO** = SAE-flange for 250/450 LD 0015-0145 and 250/450 LDN 0160-1000	**0** = standard

Filter Assembly → **250 LD 0013 H10XL – B 00 – 0 0 B5,0 – R0 P 0 0**

Seal Kit → **D 250 LD 0013 – B – R0 P 0**

Pressure	Nominal Size	Filter Media & Filtration Grade	Diff. Pressure	Element Model	Bypass Valve	Seal	Addl. Info
250 bar **450** bar **Filter Element** Type: **2.**	250/450 LD... 0003* 0005 0008 0013 0015 0018 0020 0030 0045 250/450 LD... 0040 0063 0100 0160 0250 0400 450 LD... 0095 0145 450 LDN... 0630 1000 *Filter element 2.0004	Nominal filtration grade in µm G= stainless steel wire mesh, cleanable G10 G25 G40 G60 G80 G100 VS=bonded fabric, not cleanable VS 25 VS 40 VS 60 P= paper, not cleanable P5 P10 P25 Absolute filtration grade (ISO16889)in µm H..XL=micro glass, not cleanable H1XL H3XL H6XL H10XL H20XL AS= micro glass-fibre, water absorbing, not cleanable AS1 AS3 AS6 AS10 AS20	Maximum allowable differential pressure drop across the filter element **A** = **30** bar **B** = **330** bar **C** = **160** bar	**0..** = Standard adhesive T=100ºC **E..** = Special adhesive T=160ºC **..O** = Standard material **..Z** = Zinc free	**0** = without	**P** = Buna-N / Nitrile **V** = Viton **E** = Ethylene-Propylene **N** = Neoprene	**0** = without **4** = Drain plug **5** = Silicon free **A** = pressure equalisation line **E** = Vent valve **Z** = Inspection certificate **5** = Silicon free **Z** = Inspection Certificates

Filter Element → **2. 0013 H10XL – B 00 – 0 – P -**

Maintenance Indicator

The maintenance indicator monitors the degree of clogging of the filter elements.
They are available as visual or visual/electrical displays.
See "Maintenance Indicator" brochure for technical data.

	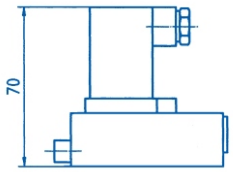	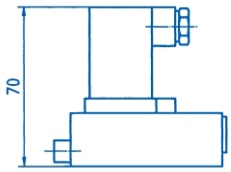
A...Optical	B.... Optical/electrical	D... Optical/electrical with three 24 V diodes and two switch points
Ordering information A2,5 = F2,5 A0 00 00P* A5,0 = F5, 0 A0 00 00P*	Ordering information B2,5 = F2,5 GW 02 00P* B5,0 = F5,0 GW 02 00P*	Ordering information D2,5 = R2,5 GW 09 ZOP* D5,0 = R5,0 GW 09 ZOP*
	Switch Symbol 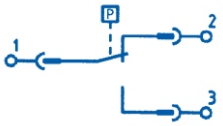	Switch Symbol 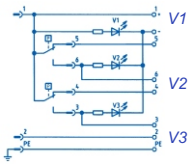 V1 LED/green in use V2 LED/red S=100% V3 LED/yellow S=75%

* Buna N / Nitrile, V = Viton, E = Ethylene propylene; N = Neoprene possible

Filter Switching Symbol

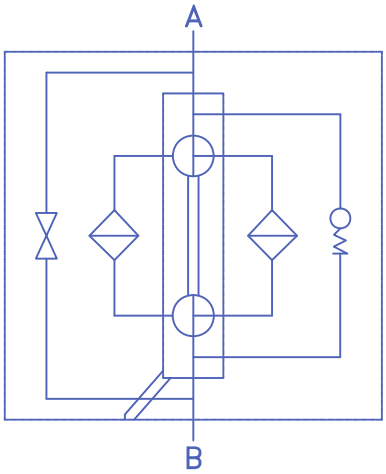

Dimensions

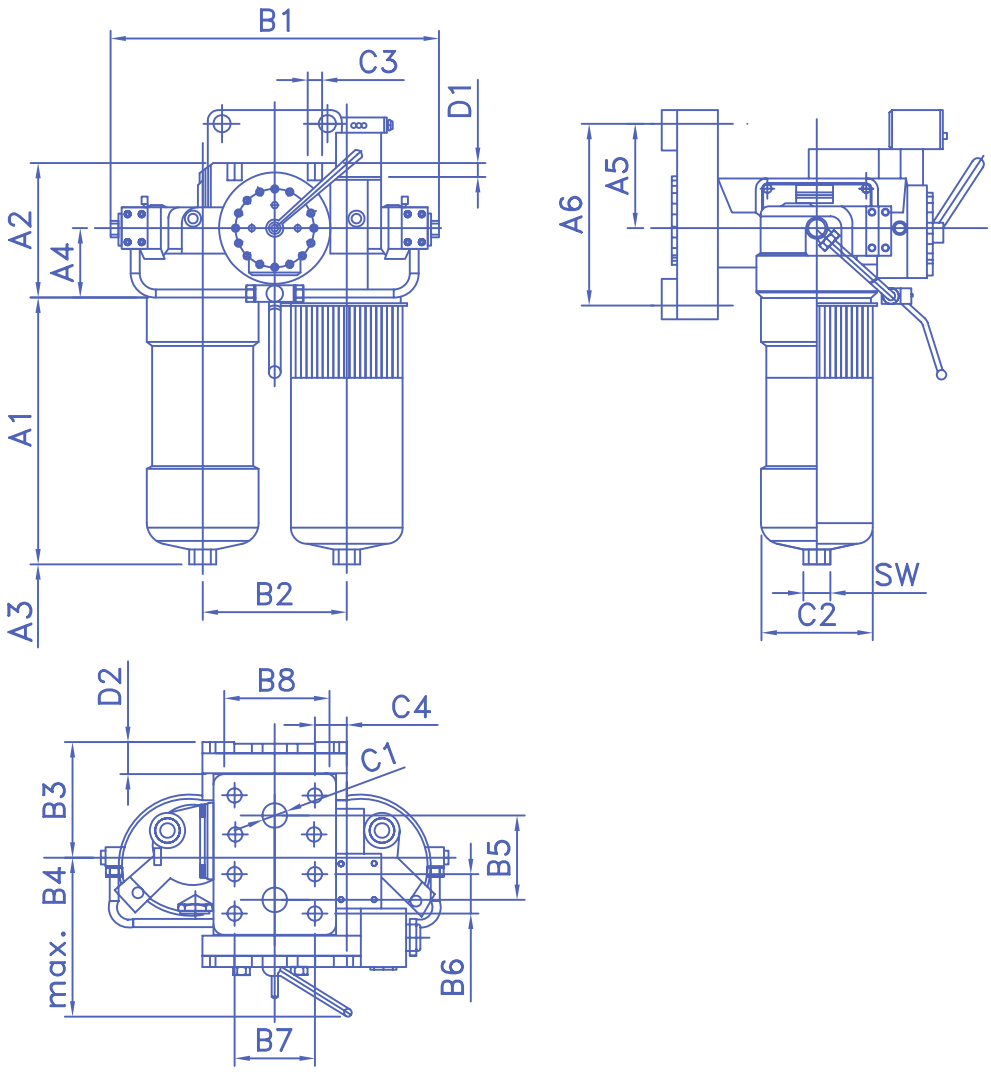

Filter Housing for Filter Elements according to EPE Standard

Type	Volume in ltrs	Weight in kg[1)]	A1	A2	A3[2)]	A4	A5	A6	B1	B2	B3	B4	B5	B6	B7	B8	C1 Connect RO/SO	C2 250	C2 450	C3	C4	D1	D2	SW
250/450 LD 0003	2x0,2	12,5	92	109	110	60	60	120	238	90	85	160	40	–	–	56	G½	Ø64	Ø67	–	Ø9	–	35	24
250/450 LD 0005	2x0,2	12,5																						
250/450 LD 0008	2x0,3	14,0	155																					
250/450 LD 0013	2x0,5	18,5	245																					
250/450 LD 0015	2x0,9	32,0	191	127,5	120	75	72,5	170	302	120	111	160	75	27,76	57,15	80	SAE 1" 6000 psi	Ø92		M12	Ø14	22	36	32
250/450 LD 0018	2x1,1	34,0	241																					
250/450 LD 0020	2x1,3	56,0	171	184		105	125	245	352	150	143	190	100	36,50	79,38	100	SAE 1½" 6000 psi	Ø114		M16	Ø18	25	43	
250/450 LD 0030	2x1,9	60,0	262																					
250/450 LD 0045	2x3,0	66,0	412																					
450 LD 0095	2x4,5	122,5	418	192		110	110	240	440	190	166	245	120	44,45	96,82	110	SAE 2" 6000 psi	–	Ø140	M20	Ø23	30	46	41
450 LD 0145	2x6,2	148,5	639																Ø156					

Filter Housing for Filter Elements according to DIN 24550

Type	Volume in ltrs	Weight in kg[1)]	A1	A2	A3[2)]	A4	A5	A6	B1	B2	B3	B4	B5	B6	B7	B8	C1 Connect RO/SO	C2 250	C2 450	C3	C4	D1	D2	SW
250/450 LDN 0040	2x0,2	12,5	92	109	110	60	60	120	238	90	85	160	40	–	–	56	G½	Ø64	Ø67	–	Ø9	–	35	24
250/450 LDN 0063	2x0,3	14,0	155																					
250/450 LDN 0100	2x0,5	18,5	245																					
250/450 LDN 0160	2x1,3	56,0	171	184	120	105	125	245	352	150	143	190	100	36,50	79,38	100	SAE 1½" 6000 psi	Ø114		M16	Ø18	25	43	32
250/450 LDN 0250	2x1,9	60,0	262																					
250/450 LDN 0400	2x3,0	66,0	412																					
450 LDN 0630	2x4,5	122,5	418	192		110	110	240	440	190	166	245	120	44,45	96,82	110	SAE 2" 6000 psi	–	Ø140	M20	Ø23	30	46	41
450 LDN 1000	2x6,2	148,5	639																Ø156					

1)= weight including standard filter element and maintenance indicator
2)= servicing height for filter element replacement

Spare Parts List

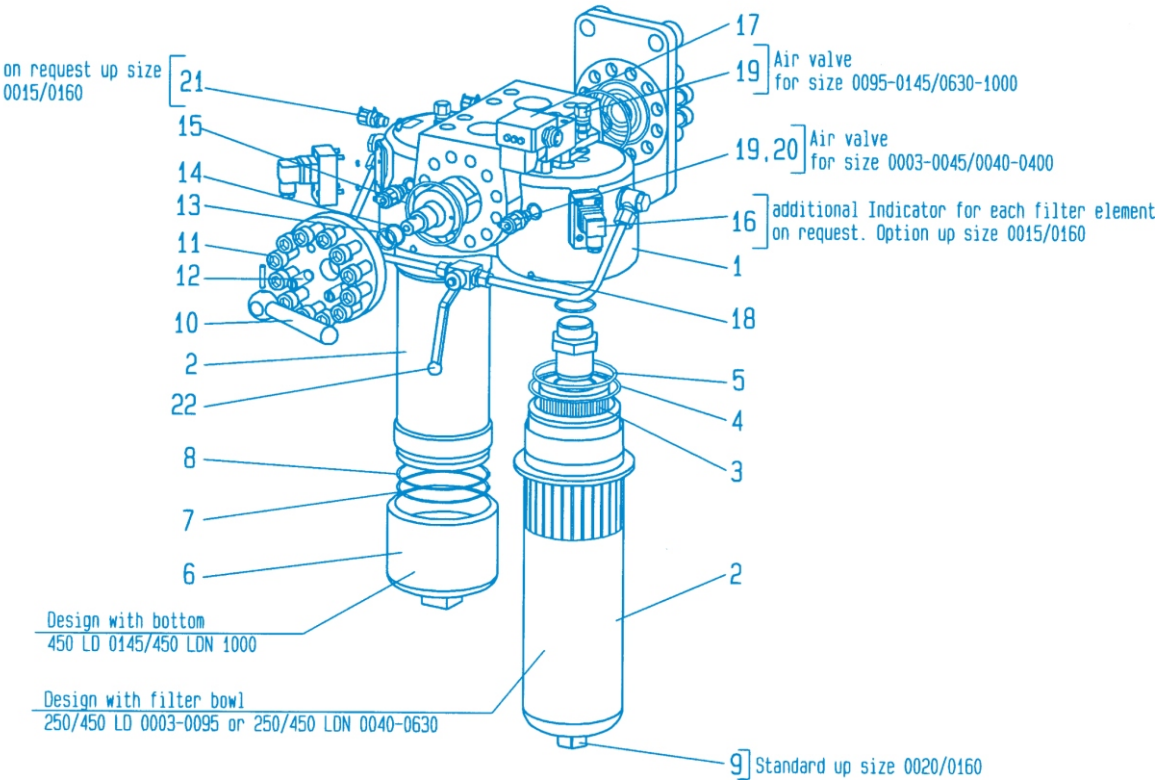

Switching lever indicates side in use

		Size LD Size LDN		0003		0005 0040		0008 0063		0013 0100		0015		0018		0020 0160		0030 0250		0045 0400		0095 0630		0145 1000	
				250	450	250	450	250	450	250	450	250	450	250	450	250	450	250	450	250	450	–	450	–	450
Part	Qty	Designation	Material	Part-Number																					
1	1	Filter head	GGG 50	Please indicate ordering information “Filter”																					
2	2	Filter bowl	C-steel/24CrMo5/42CrMo4	Please indicate ordering information “Filter”																					
3	2	Filter element	Various	Please indicate ordering information “Filter Element”																					
3.1	2	O-ring	Buna N/Viton	Please indicate ordering information “Seal Kit”																					
4	2	Supporting ring	Teflon	Please indicate ordering information “Seal Kit”																					
5	2	O-ring	Buna N/Viton	Please indicate ordering information “Seal Kit”																					
6	2	Bottom	42CrMo4	–																				4374	
7	4	Supporting ring	Teflon	–																				Indicate ordering info. “Seal kit”	
8	4	O-ring	Buna N/Viton	–																					
9	2	Plug	St	–												778									
10	1	Lever	St	3073												3074						3075			
10.1	1	Change sleeve	Spring steel/A4	745								3434				747									
11	8	Hexagon screw	A4	3388								–													
	32	Hexagon screw	8.8	–								979				654						–			
	24	Hexagon screw	8.8	–																		661			
12	2	Set screw	St	3959								710				715						719			
13	2	Supporting ring	Teflon	Please indicate ordering information “Seal Kit”																					
14	2	O-ring	Buna N/Viton	Please indicate ordering information “Seal Kit”																					
15	2	O-ring	Buna N/Viton	Please indicate ordering information “Seal Kit”																					
16	2	Maintenance Indicator	Various	–								Please indicate ordering information “Maintenance Indicator”													
17	1	Maintenance Indicator	Various	Please indicate ordering information “Maintenance Indicator”																					
18	2	Stud bolt	8.8	–																		4371			
19	2	Measuring connection	St/Viton	–	1282	–	1282	–	1282	–	1282	–	1282	–	1282	–	1282	–	1282	–	1282	1282			
20	2	Vent valve	Bronze	848	–	848	–	848	–	848	–	848	–	848	–	848	–	848	–	848	–				
20.1	2	Sealing ring	Iron	Please indicate ordering information “Seal Kit”																					
21	2	Measuring connection	St/Viton	–								1282													
22	1	Pressure equalisation device	Various	Please indicate ordering information “Filter”																					

EPE
Filters . Accumulators

Installation, Starting and Maintenance

Filter Installation

Verify operating pressure with name plate information.
Mount the filter assembly using mounting device on the head Part 1 considering flow direction (direction arrows) and servicing height required for cleaning/replacing elements Part 3.
Remove dust protection plugs from filter inlet and outlet, screw filter in pipeline without tension stress.

Connection of Electrical Maintenance Indicator

See brochure 64 and
list according this brochure.

Starting

Put valve handle Part 10 in the central position to fill both filter sides. Switch on system pump. Ventilate filter by opening the valves Part 19/Part 20, close when operating liquid emerges. Put valve handle Part 10 in end stop for standard operation.

Maintenance

The filter element is clogged and needs to be replaced or cleaned when at the operating temperature the visual indicator's Part 17 red pin reaches its final position and/or the electrical switch is activated.

Filter Element Service

Open pressure-equalisation valve Part 22 to equalise pressure in both filter housings.
Switch change over valve on other side by moving lever Part 10.
Close pressure-equalisation valve Part 22.
Open the valves Part 19/Part 20 on the filter taken out of operation and reduce the pressure.
Unscrew filter bowl Part 2/Bottom Part 6 (only 450 LD 0145 and 450 LDN 1000) of filter bowl Part 2 and remove filter element Part 3, turning slightly off its spigot in the filter head (Part1).
Check filter Part 2 inside and clean if necessary.
Replace filter element H…XL, P…, VS… and AS… .
The filter element with G… media is cleanable. The efficiency of the cleaning process depends on the characteristics of contamination and the final pressure drop prior to servicing/cleaning the element. If the differential pressure after the filter element's cleaning process exeeds more than 50% of the pre service value the G… element also needs to be replaced. Install cleaned or replaced filter element by slightly turning it back on its spigot.
250/450 LD 0003–0045 or 250/450 LDN 0040–0400:
Check o-ring Part 5 on filter bowl Part 2, replace in case of damage or wear.
450 LD 0095–0145 or 450 LDN 0630–1000:
Check o-ring Part 8 on filter bowl Part 2, replace in case of damage or wear. Screw filter bowl Part 2/Bottom Part 6 and tighten it at hexagon bolt using a suitable tool.
Open pressure-equalisation valve Part 22, ventilate filter by opening the valves Part 19/Part 20, close when operating liquid emerges.
Close pressure-equalisation valve Part 22.

Warning

Assemble and disassemble filter only when system is switched off!
Vessel is under pressure!
Leave pressure-equalisation valve closed while filter housing is out fo service!
Do not operate switching device while filter housing is out of service!
Do not change maintenance indicator or pressure-equalisation valve when filter is under pressure:
Functions and safety warranty only with EPE-spare part!
Service filter only by trained personal!

EPE PROCESS FILTERS & ACCUMULATORS PVT LTD
Techni Towers
C-54/A, A.P.I.E., Balanagar
Hyderabad -500 037. A.P.,India.
Tel. Nos. : 23778803/23778804/23871445
Fax Nos. : 040-23871447.
Internet : www.epe-india.com
E-mail : business@epe-india.com